Champion™ 28

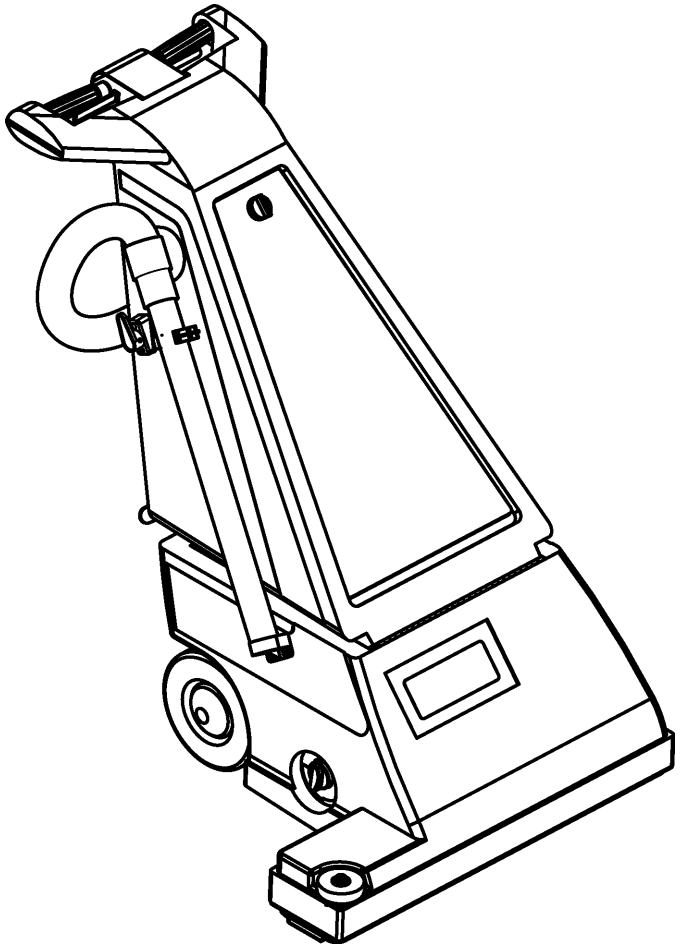

PARTS LIST

Kent MODEL 56648330

This manual is for machines after SN1588572.

KENT

Simple. Clean.

5/02 revised 4/06 FORM NO. 56042434

DESCRIPTION	PAGE
Base Housing	2-3
Brush Motor / Brush Assembly	4-5
Decal System	6-7
Handle System-1 (Before SN1887477)	8-9
Handle System-2 (Before SN1887477)	10-11
Handle System-1 (After SN1887476)	12-13
Handle System-2 (After SN1887476)	14-15
Wiring Diagram	16-17

WHEN ORDERING PARTS

* Use the 8 digit numbers from the “Ref. No.” columns in this parts list.
* Specify the model and serial number of the machine.
* Use the space below to record the model and serial number for future reference.

Model _____ Serial No. _____

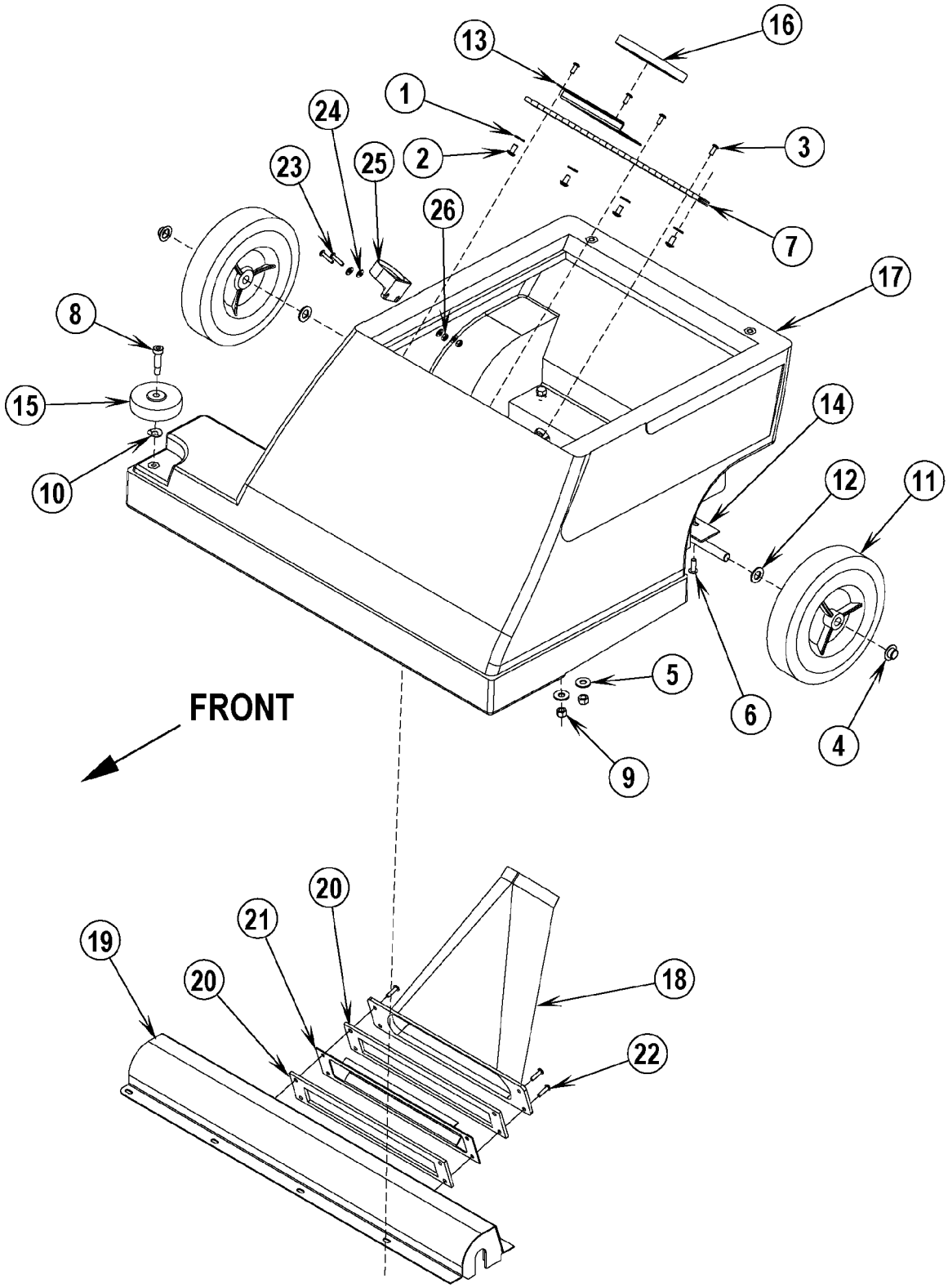
16
13
1
24
2
3
23
25
26
7
17
8
15
14
10
12
11
5
FRONT
6
4
9
20
21
19
20
18
22

BASE HOUSING

Champion™ 28

Item	Ref. No.	Qty	Description
1	56002098	4	Wsh, Flt SAE 1/4
2	56002145	4	Scr, Pan Phil 1/4-20 x .50
3	56002147	4	Scr, Pan Phil (UNF) 10-32 x .20
4	56009097	2	Nut, Push Cap
5	56002220	4	Wsh, Flt Std 5/16
6	56002507	2	Scr, Pan Phil 1/4-20 x .75
7	56055213	1	Hinge, Butt
8	56003472	1	Scr, Soc Shd .38 x 1.00 x 5/16-18
9	56002701	4	Nut, Hex Nyl Loc 5/16-18
10	56009024	1	Wsh, Bowed .375 x .844 x .060
11	56210148	2	Wheel
12	56009003	2	Wsh, Flt .516 x .938 x .075
13	56055217	1	Bracket, Intake Tube
14	56330045	1	Weldment, Axle
15	56049261	1	Wheel
16	56055054	1	Gasket, Foam
17	56330010	1	Tank, Base Machined
	56330011	1	Brush Housing Assembly **(#18-22)**
18	56055121	1	Tube, Intake Machined
19	56034673	1	Weldment, Brush Housing
20	56055122	2	Gasket
21	56055615	1	Plate, Stl
22	56002192	1	Scr, Pan Phil 10-24 x .75
23	56002733	2	Scr, Pan Phil 10-24 x .88
24	56001954	4	Wsh, Flt SAE #10
25	56331151	1	Holder, Tube
26	56002832	2	Nut, Hex Nyl Loc-Thin 10-24

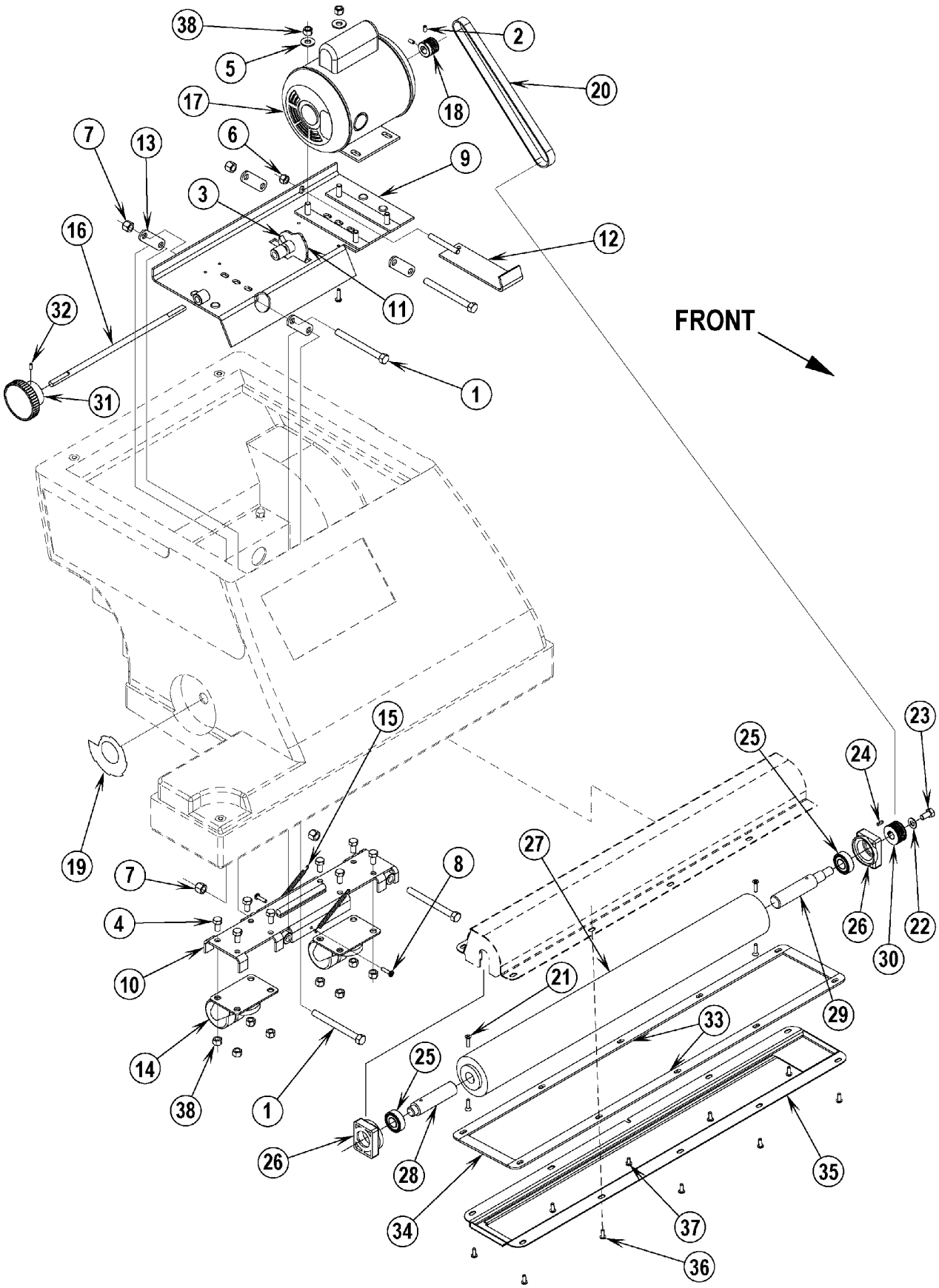
38
5
2
20
17
18
7
13
6
9
3
16
12
11
32
FRONT
31
1
15
23
25
24
19
27
8
7
4
26
22
30
10
21
29
33
14
25
38
1
26
28
35
34
37
36

BRUSH MOTOR / BRUSH ASSEMBLY

Champion™ 28

Item	Ref. No.	Qty	Description
	56330012	1	Brush, Motor Assy **(#1-18, 38)**
1	56001819	4	Scr, Hex Hd 3/8-16 x 4.00
2	56001823	2	Scr, Soc Set Loc 10-24 x .38
3	56002021	1	Scr, Soc Set Loc 5/16-18 x .38
4	56002035	8	Scr, Hex Hd 5/16-18 x .62
5	56002220	2	Wsh, Flt Std 5/16
6	56002701	1	Nut, Hex Nyl Loc 5/16-18
7	56002769	4	Nut, Hex Nyl Loc 3/8-16
8	56009043	4	Scr, Pan Phil Thd Form 10-24 x .75
9	56034675	1	Weld't, Motor Bracket
10	56034677	1	Caster Bracket Weldment
11	56034679	1	Weld't, Cam Height Adjustment
12	56034691	1	Weld't, Adjustment Bracket
13	56055031	4	Steel, Bar
14	56055134	2	Caster, 2.00 dia
15	56055135	2	Spring, Ext
16	56055137	1	Shaft, Height Adjustment
17	56330013	1	Motor, 1/3 HP
*	56755056	1	Capacitor 400-480Mfd. **(replacement for 56330013)**
18	56330016	1	Sheave, Poly V Belt
19	56057686	1	Label, Height Adj.
20	56055123	1	Belt, Poly V
	56330015	1	Brush Assembly **(#21-30)**
21	56001900	4	Scr, Flt Phil 10-24 x .75
22	56001939	1	Wsh, Flt SAE 5/16
23	56002929	1	Scr, Hex Hd Loc 5/16-18 x .62
24	56003235	1	Key, Sq .12 x .44
25	56027222	2	Bearing, Ball
26	56055030	2	Mount, Bearing
27	56055126	1	Brush, Cylinder
28	56055127	1	Shaft, Brush
29	56330014	1	Shaft, Brush
30	56330914	1	Sheave, Poly V Belt
31	56475480	1	Knob
32	56003123	1	Scr, Soc Set 10-24 x .38
33	56055187	2	Gasket, Foam
34	56052279	2	Foam Gasket Strip
35	56055033	1	Plate, Bottom, SS, 28 in. Upright
36	56002147	9	Scr, Pan Phil (UNF) 10-32 x .20
37	56009030	1	Scr, Pan Phil Thd Form 10-24 x .38
38	56002826	10	Nut, Hex Nyl Loc-Thin 5/16-18

* = Not Shown

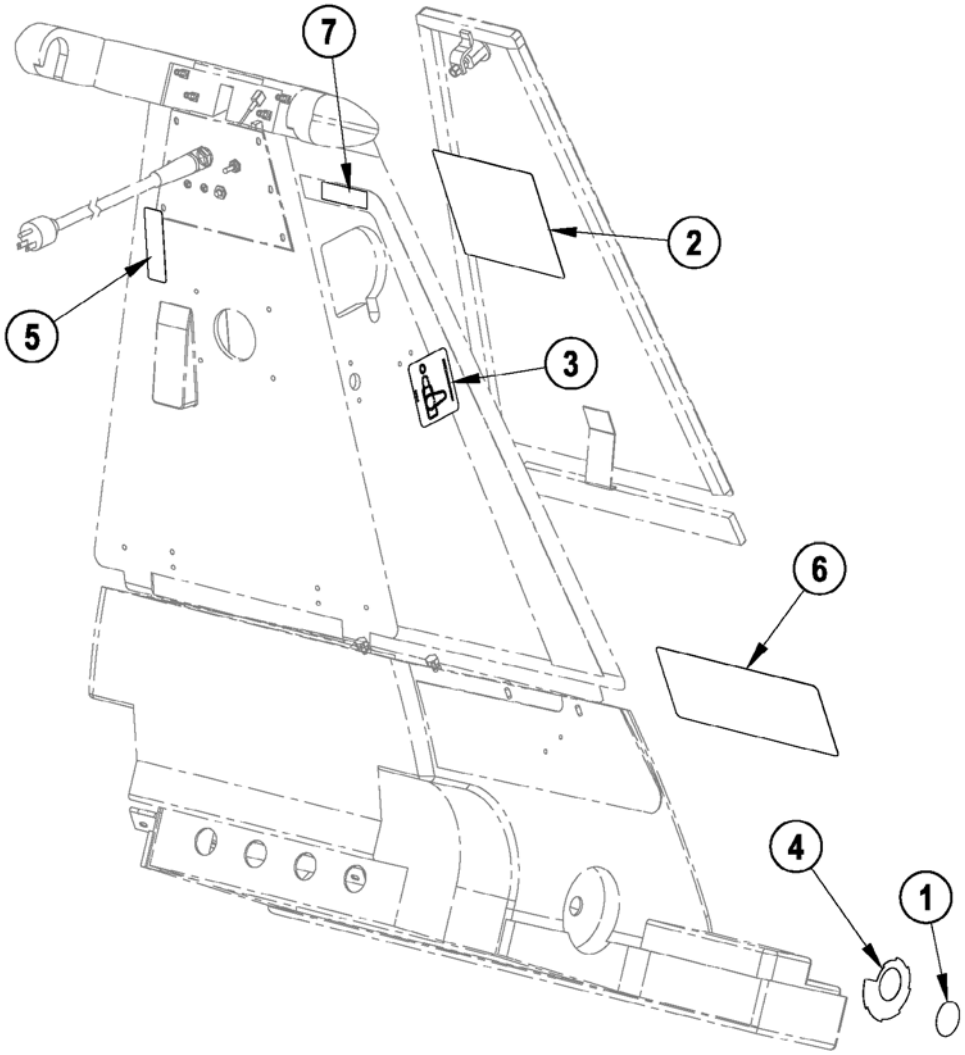
7
2
5
3
6
4
1

Item	Ref. No.	Qty	Description
1	56015188	1	Decal, Knob
2	56016472	1	Decal, Wiring
3	56016619	1	Decal, Wand **(After SN1887476)**
4	56057686	1	Label, Height Adjust
5	56630714	1	Label, Warning
6	56016329	1	Decal, Champion 28
7	56016475	1	Decal, Wand **(Before SN1887477)**
*	56014119	6	Decal, Ground Symbol

* = Not Shown

			HANDLE SYSTEM-1 (Before SN1887477)	02-5
8			Champion™ 28	05-9

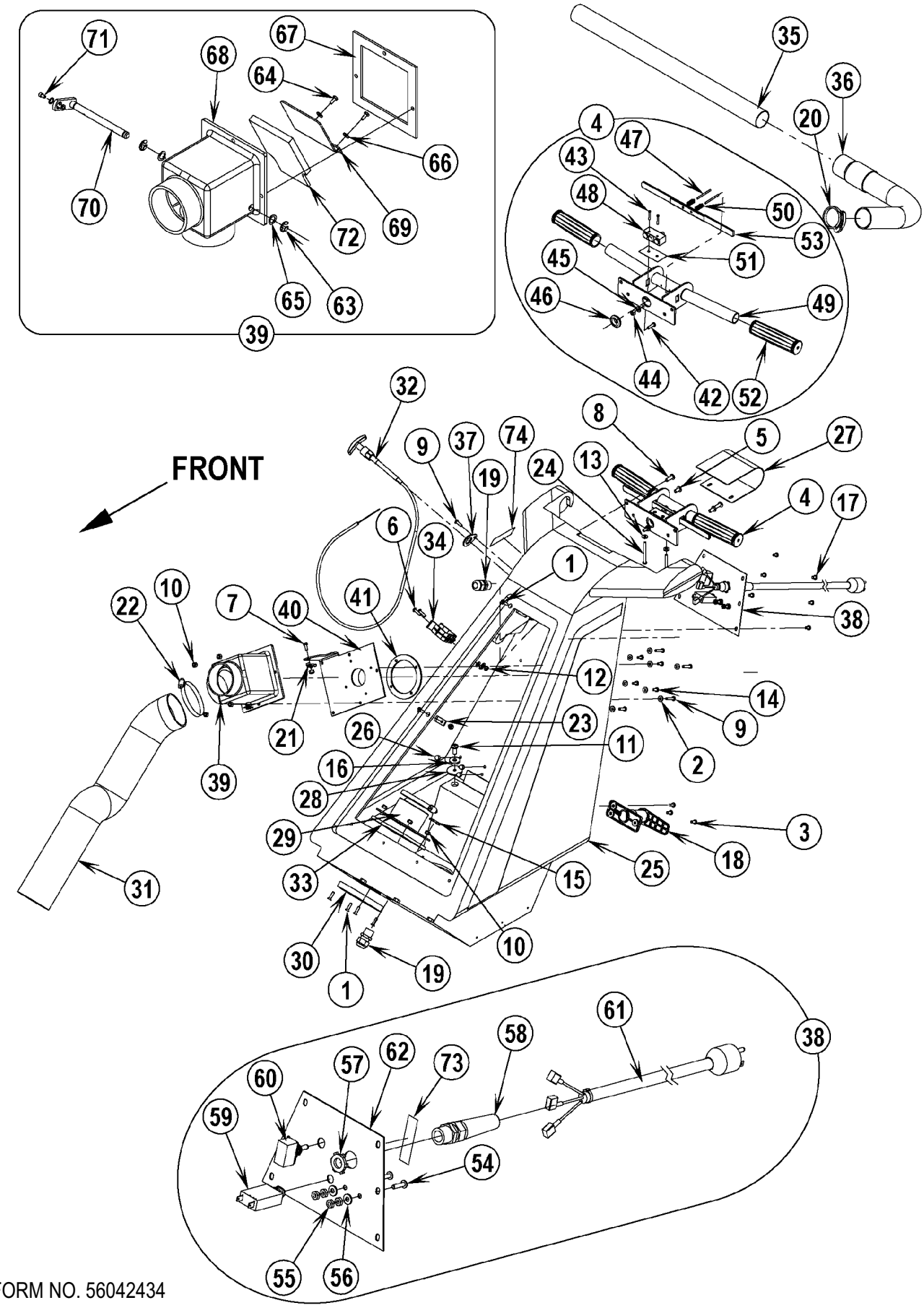

HANDLE SYSTEM-1 (Before SN1887477)

Champion™ 28

Item	Ref. No.	Qty	Description
1	56001900	6	Scr, Flt Phil 10-24 x .75
2	56001954	11	Wsh, Flt SAE #10
3	56001993	6	Scr, Pan Phil 10-24 x .50
4	56330005	1	Handle Assy **(#42-53)**
5	56002145	2	Scr, Pan Phil 1/4-20 x .50
6	56002192	4	Scr, Pan Phil 10-24 x .75
7	56002503	1	Scr, Hex Hd 10-24 x .50
8	56002507	2	Scr, Pan Phil 1/4-20 x .75
9	56002674	4	Scr, Pan Phil 10-24 x 1.00
10	56002768	17	Nut, Hex Nyl Loc 10-24
11	56002793	2	Scr, Pan Phil 5/16-18 x .75
12	56002832	2	Nut, Hex Nyl Loc-Thin 10-24
13	56009011	2	Wsh, Int SHPRF #10
14	56009029	4	Scr, Pan Phil Thd Form 10-24 x .50
15	56009095	2	Nut, Conduit Lock 1/2-14
16	56009122	2	Wsh, Flt .344 x .938 x .125
17	56009247	12	Scr, Pan Phil Plastite 10-14 x .38
18	56171112	2	Cord Hook Assy
19	56323135	2	Strain Relief
20	56331304	1	Clamp, Hose
21	56344265	1	Clamp, Cable
22	56352829	2	Clamp, Hose SAE #52
23	56385564	3	Clamp, P
24	56003503	2	Scr, Pan Phil 10-24 x 2.25
25	56648332	1	Tank, Upper Machined
26	56009061	6	Nut, Acorn SS 10-24
27	56639107	1	Weld't, Switchbox Cover
28	56009275	2	Washer, Neoprene
29	56034690	1	Weld't, Hose Connector
30	56055054	1	Gasket, Foam
31	56055081	1	Hose, Vac
32	56331349	1	Cable
33	56055182	1	Gasket, Foam
34	56331154	1	Clamp, Plastic
35	56331153	1	Wand
36	56331152	1	Hose Assy, Vac
37	56330921	1	Plate
38	56330918	1	Electrical Assy **(#54-62)**
39	56330018	1	Butterfly Assy **(#63-72)**
40	56330021	1	Tube Weld't.
41	56330909	1	Gasket
42	56002192	1	Scr, Pan Phil 10-24 x .75
43	56002857	2	Scr, Pan Phil 6-32 x .88
44	56009009	1	Nut, Hex Machine 10-24
45	56009011	1	Wsh, Int SHPRF #10
46	56497610	1	Grommet
47	56003502	2	Pin
48	56026412	1	Switch, Push
49	56034663	1	Weld't, Handle
50	56046648	2	Spring
51	56046653	1	Insulation Paper
52	56047418	2	Hand Grip
53	56050274	1	Trigger
54	56002192	2	Scr, Pan Phil 10-24 x .75
55	56009009	4	Nut, Hex Machine 10-24
56	56009011	2	Wsh, Int SHPRF #10
57	56009095	1	Nut, Conduit Lock 1/2-14
58	56323136	1	Strain Relief
59	56387316	1	Circuit Breaker, 10 Amp
60	56026973	1	Switch, Toggle
61	56637610	1	Cord Set
62	56643059	1	Cover, Access
63	56003269	2	Ring, Ret Ext Type E Reinf .38 Dia
64	56009032	2	Scr, Hex Thd Form 6-32 x .38
65	56009045	2	Wsh, Bowed .375 x .578 x .060
66	56009056	2	Wsh, Int SHPRF #6
67	56331312	1	Gasket
68	56331313	1	Housing
69	56331345	1	Plate
70	56331356	1	Lever Weld't.
71	56442445	1	Swivel Wire
72	56331155	1	Seal
73	56630714	1	Label, Warning
74	56016475	1	Decal, Wand
**	56323296	A/R	Vacuum Tool Kit

** = Optional

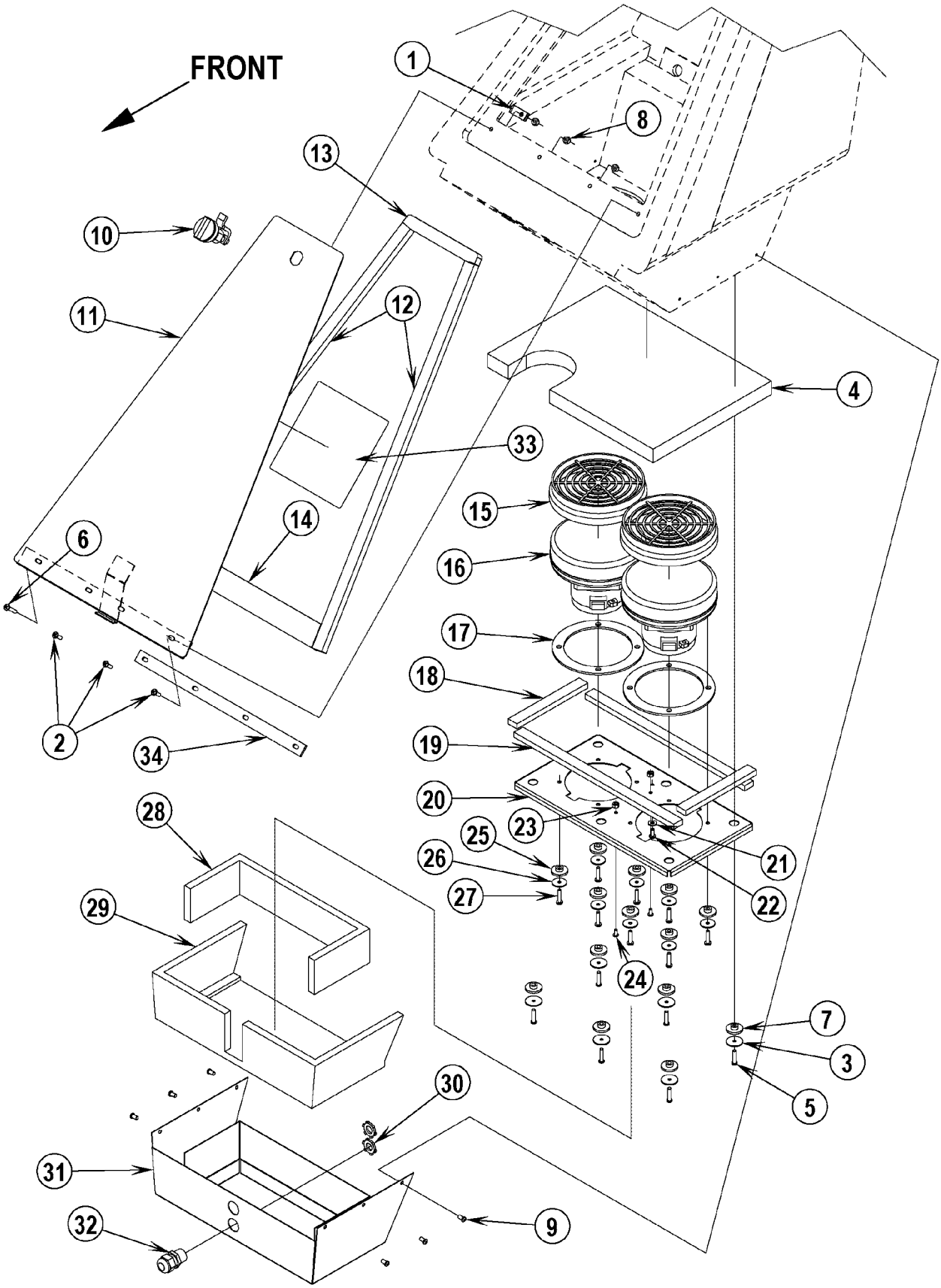
FRONT
1
8
13
10
11
12
4
33
15
14
6
16
17
18
2
34
19
20
23
28
25
21
26
22
27
29
24
7
3
30
5
31
32
9

Item	Ref. No.	Qty	Description
1	56486112	1	Clamp, P
2	56002124	3	Scr, Pan Phil 10-24 x .62
3	56009268	6	Wsh, Flt .187 x 1.00 x .062
4	56055084	1	Guard, Bag
5	56003504	6	Scr, Pan Phil Plastite 10-14 x .88
6	56002674	1	Scr, Pan Phil 10-24 x 1.00
7	56111384	6	Rubber Bushing
8	56002768	4	Nut, Hex Nyl Loc 10-24
9	56009247	12	Scr, Pan Phil Plastite 10-14 x .38
	56330006	1	Door Assembly **(#10-14)**
10	56055050	1	Latch, Twist
11	56639110	1	Weldment, Door
12	56055053	2	Gasket
13	56009247	12	Scr, Pan Phil Plastite 10-14 x .38
14	56330033	1	Gasket
	56330007	1	Vacuum Motors Assy **(#15-27)**
15	56384898	2	Filter
16	56325096	2	Vacuum Motor
17	56209325	2	Gasket
18	56055042	2	Gasket, Foam
19	56055041	2	Gasket, Foam
20	56055023	1	Plate, Mtg Vac Motors
21	56009011	1	Wsh, Int Shprf #10
22	56009029	1	Scr, Pan Phil Thd Form 10-24 x .50
23	56002808	2	Nut, Hex Nyl Loc 8-32
24	56001818	2	Scr, Pan Phil 8-32 x .38
25	56111384	8	Rubber Bushing
26	56009096	8	Wsh, Flt .193 x .875 x .060
27	56003505	8	Scr, Pan Phil Thd Form 10-24 x .88
	56330008	1	Muffler Assembly **(#28-32)**
28	56055118	1	Gasket, Foam
29	56055117	1	Gasket, Foam
30	56009095	2	Nut, Conduit Lock 1/2-14
31	56034668	1	Weldment, Muffler
32	56323135	1	Strain Relief
33	56016472	1	Decal, Wiring
34	56055218	1	Gasket, Foam
*	56330589	1	Bag, Collector
*	56330608	1	Clip, Bag

* = Not Shown

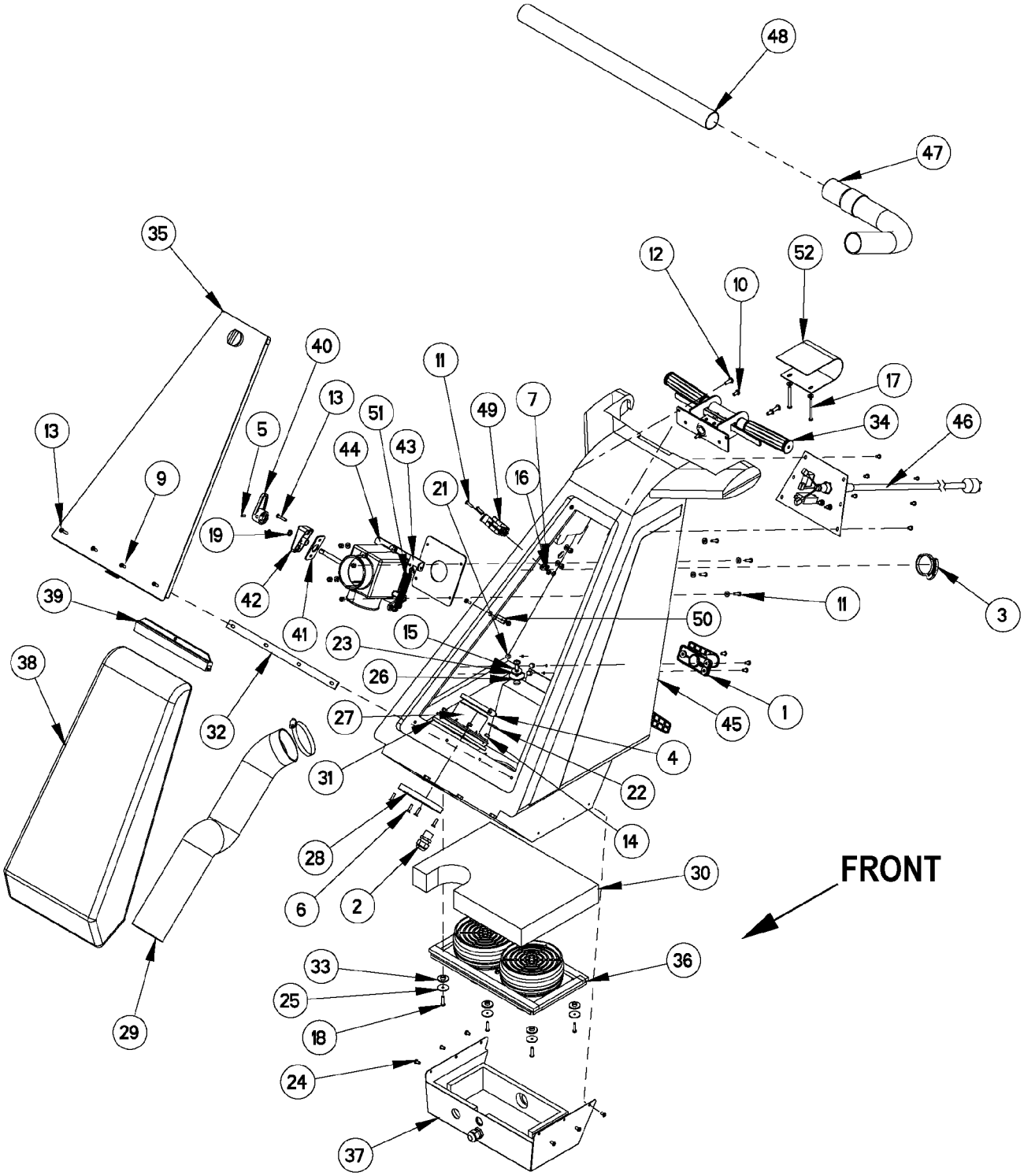
48
47
35
12
52
10
40
11
17
13
51
49
7
34
46
13
5
44
43
16
9
21
19
42
11
3
39
41
50
15
23
38
26
1
45
32
27
4
31
22
14
28
30
FRONT
6
2
33
36
25
18
29
24
37

Item	Ref. No.	Qty	Description
1	56171112	2	Cord Hook Assy
2	56323135	2	Strain Relief
3	56331304	1	Clamp, Hose
4	56352829	2	Clamp, Hose SAE #52
5	56001823	1	Scr, Soc Set Loc 10-24 X .38
6	56001900	6	Scr, Flt Phil 10-24 X .75
7	56001954	10	Wsh, Flt SAE #10
8	56001993	6	Scr, Pan Phil 10-24 X .50
9	56002124	3	Scr, Pan Phil 10-24 X .62
10	56002145	2	Scr, Pan Phil 1/4-20 X .50
11	56002192	6	Scr, Pan Phil 10-24 X .75
12	56002507	2	Scr, Pan Phil 1/4-20 X .75
13	56002674	3	Scr, Pan Phil 10-24 X 1.00
14	56002768	16	Nut, Hex Nyl Loc 10-24
15	56002793	2	Scr, Pan Phil 5/16-18 X .75
16	56002832	2	Nut, Hex Nyl Loc-Thin 10-24
17	56003503	2	Scr, Pan Phil 10-24 X 2.25
18	56003504	6	Scr, Pan Phil Plastite 10-14 X .88
19	56003706	1	O-Ring, Quad
20	56009011	2	Wsh, Int Shprf #10
21	56009061	6	Nut, Acorn SS 10x24
22	56009095	2	Nut, Conduit Lock 1/2-14
23	56009122	2	Wsh, Flt .344 X .938 X .125
24	56009247	12	Scr, Pan Phil Plastite 10-14 X .38
25	56009268	6	Wsh, Flt .187 X 1.00 X .062
26	56009275	2	Washer, Neoprene
27	56034690	1	Hose Connector
28	56055054	1	Gasket, Foam
29	56055081	1	Hose, Vac
30	56055084	1	Guard, Bag
31	56055182	1	Gasket, Foam
32	56055218	1	Gasket, Foam
33	56111384	6	Rubber Bushing
34	56330005	1	Handle Assembly
35	56330006	1	Door Assembly
36	56330007	1	Vacuum Motors Assembly
37	56330008	1	Muffler Assembly
38	56330589	1	Bag, Collector
39	56330608	1	Clip, Bag
40	56330821	1	Lever
41	56330822	1	Gasket, Base
42	56330823	1	Base, Lever Mount
43	56330827	1	Bracket, Spring Mount
44	56330830	1	Vacuum Diverter Assembly
45	56330836	1	Tank, Upper Machined
46	56330918	1	Electrical Assembly
47	56331152	1	Hose Assembly, Vac
48	56331153	1	Wand
49	56331154	1	Clamp, Plastic
50	56385564	3	Clamp, P
51	56448112	1	Spring Ext
52	56639107	1	Weld't, Switchbox Cover

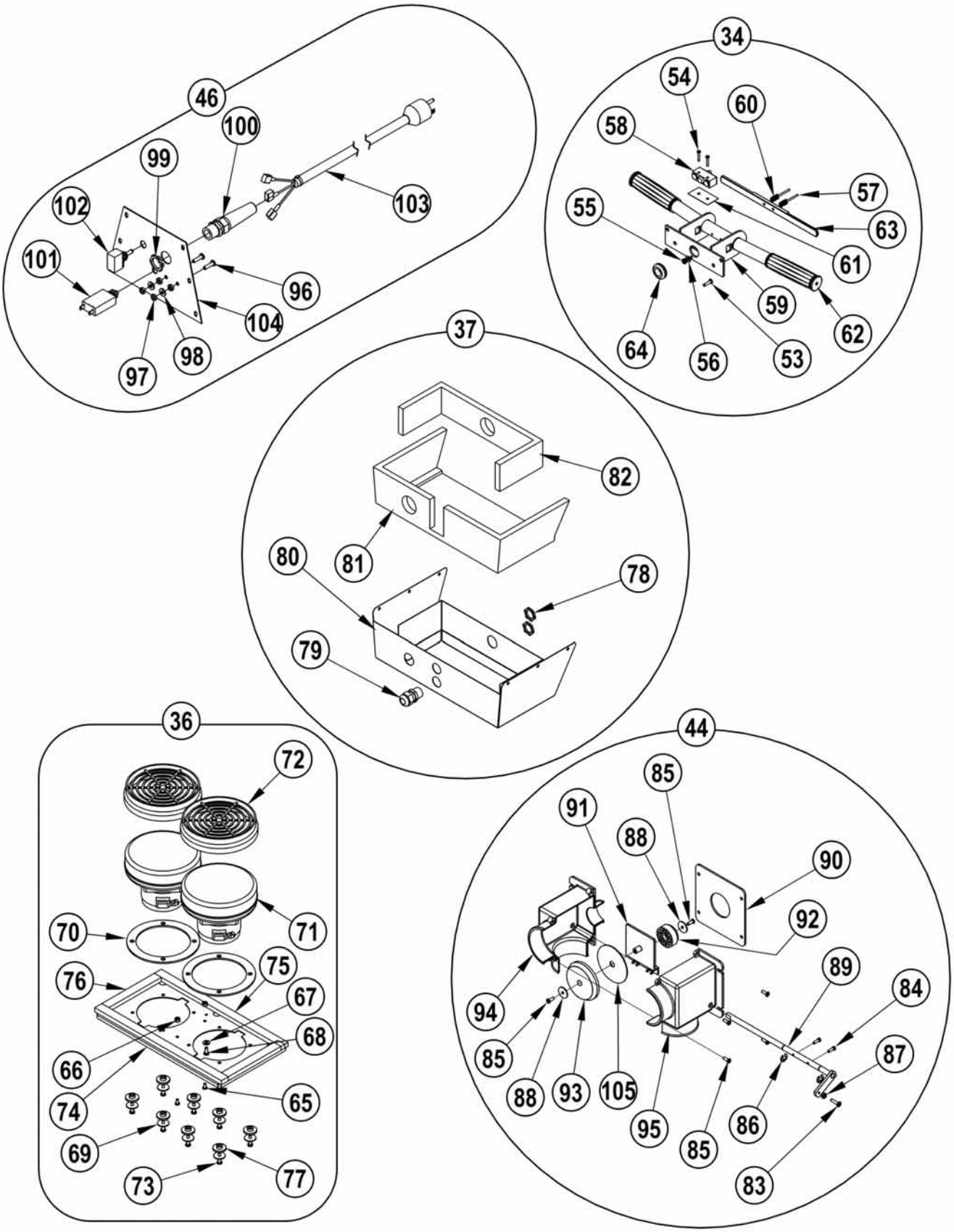
46
100
99
102
101
103
96
104
98
97
34
54
60
58
57
55
63
61
59
62
64
56
53
37
82
81
80
78
79
36
72
71
70
75
76
67
68
66
74
65
69
73
77
44
85
91
88
90
92
89
84
94
85
87
88
93
105
95
86
85
83

Item	Ref. No.	Qty	Description
34	**56330005**	**1**	**Handle Assy (#53-64)**
53	56002192	1	Scr, Pan Phil 10-24 X .75
54	56002857	2	Scr, Pan Phil 6-32 X .88
55	56003502	2	Pin
56	56009009	1	Nut, Hex Machine 10-24
57	56009011	1	Wsh, Int Shprf #10
58	56026412	1	Switch, Push
59	56034663	1	Weldment, Handle
60	56046648	2	Spring
61	56046653	1	Insulation Paper
62	56047418	2	Handle Grip
63	56050274	1	Trigger
64	56760212	1	Grommet
36	**56330007**	**1**	**Vacuum Motors Assy (#65-77)**
65	56209325	2	Gasket
66	56325096	2	Vacuum Motor
67	56384898	2	Filter
68	56001818	2	Scr, Pan Phil 8-32 X .38
69	56002808	2	Nut, Hex Nyl Loc 8-32
70	56003505	8	Scr, Pan Phil Thd Form 10-24 X .88
71	56009011	1	Wsh, Int Shprf #10
72	56009029	1	Scr, Pan Phil Thd Form 10-24 X .50
73	56009096	8	Wsh, Flt .193 X .875 X .060
74	56055023	1	Plate, Mtg Vac Motors
75	56055041	2	Gasket, Foam
76	56055042	2	Gasket, Foam
77	56111384	8	Rubber Bushing
37	**56330008**	**1**	**Muffler Assy (#78-82)**
78	56323135	1	Strain Relief
79	56009095	2	Nut, Conduit Lock 1/2-14
80	56034668	1	Weldment, Muffler
81	56055117	1	Gasket, Foam
82	56055118	1	Gasket, Foam

Item	Ref. No.	Qty	Description
44	**56330830**	**1**	**Vacuum Diverter Assy (#83-95, 105)**
83	56002192	1	Scr, Pan Phil 10-24 x .75
84	56002438	2	Scr, Hex Thd Form 8-32 x .50
85	56003093	6	Scr, Pan Phil Plastite 8-16 x .50
86	56003269	2	Ring, Ret Ext Type E Reinf. 0.38 Dia
87	56009009	1	Nut, Hex Machine 10-24
88	56009096	2	Wsh, Flt .193 x .875 x .060
89	56330824	1	Shaft Weldment
90	56330828	1	Gasket, Housing
91	56330829	1	Plate, Diverter
92	56330831	1	Seal, Wand Vacuum
93	56330832	1	Seal, Brush Vacuum
94	56330833	1	Housing, Left Half
95	56330834	1	Housing, Right Half
105	56330837	1	Spacer Plate
46	**56330918**	**1**	**Electrical Assy (#96-104)**
96	56323136	1	Strain Relief
97	56387316	1	Circuit Breaker, 10 Amp
98	56002192	2	Scr, Pan Phil 10-24 x .75
99	56009009	4	Nut, Hex Machine 10-24
100	56009011	2	Wsh, Int Shprf #10
101	56009095	1	Nut, Conduit Lock 1/2-14
102	56026973	1	Switch, Toggle
103	56637610	1	Cord Set
104	56643059	1	Cover, Access

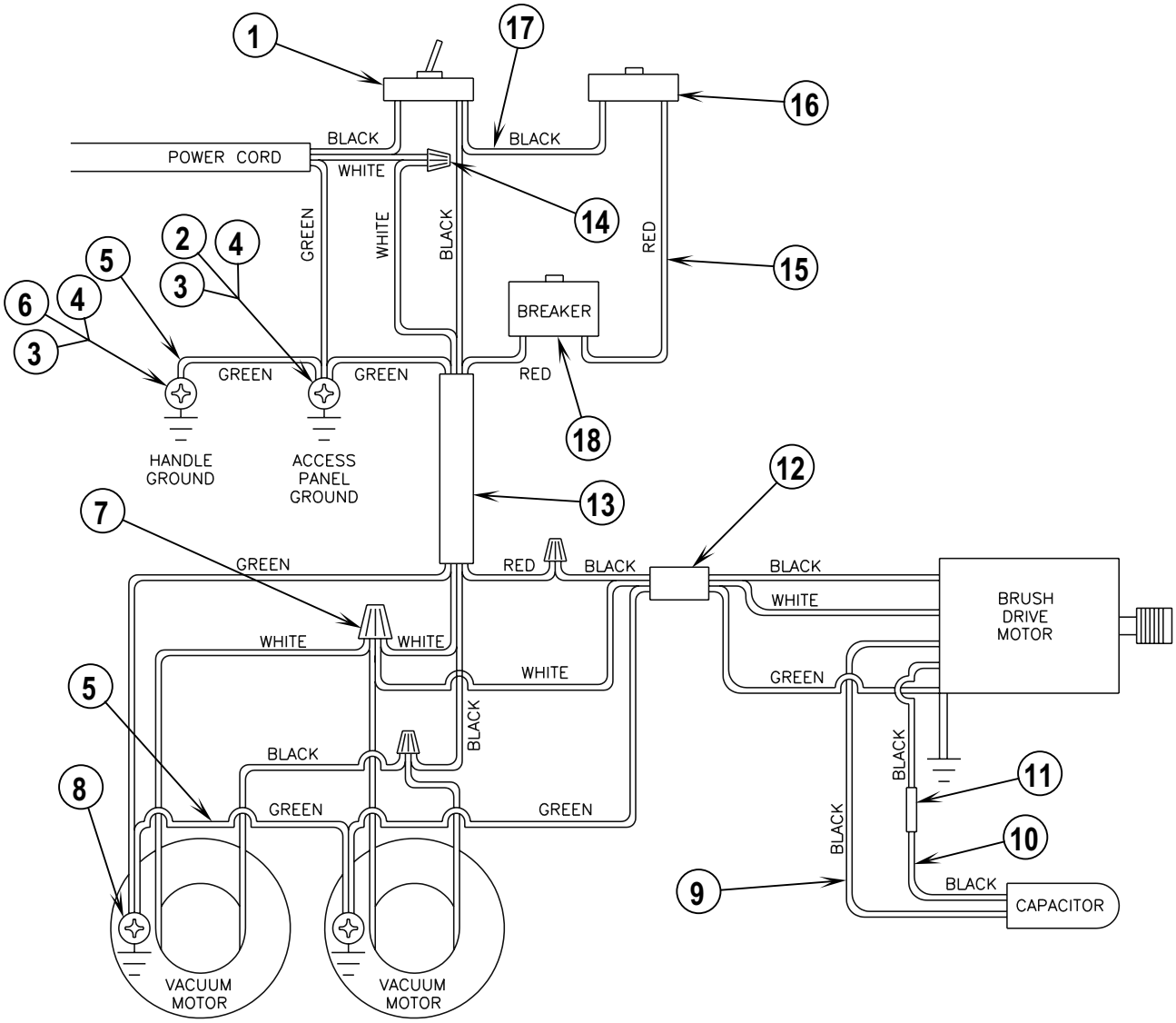
1
17
16
BLACK
BLACK
POWER CORD
WHITE
14
GREEN
WHITE
BLACK
RED
15
2
4
5
3
6
4
3
BREAKER
GREEN
GREEN
RED
18
HANDLE GROUND
ACCESS PANEL GROUND
12
13
7
GREEN
RED
BLACK
BLACK
WHITE
BRUSH DRIVE MOTOR
WHITE
WHITE
WHITE
GREEN
5
BLACK
BLACK
BLACK
11
8
GREEN
GREEN
BLACK
10
9
BLACK
CAPACITOR
VACUUM MOTOR
VACUUM MOTOR

Item	Ref. No.	Qty	Description
1	56026973	1	Switch, Toggle
2	56002192	1	Scr, Pan Phil 10-24 x .75
3	56009011	6	Wsh, Int Shprf #10
4	56009009	6	Nut, Hex 10-24
5	56900727	2	Asm, Wire
6	56002124	1	Scr, Pan Phil 10-24 x .62
7	56151353	1	Nut, Wire
8	56009030	2	Scr, Pan Phil Thd Form 10-24 x .38
9	56900646	1	Asm, Wire
10	56900646	1	Asm, Wire
11	56481562	1	Splice, Conductor
12	56025903	1	Cable, Elect
13	56025897	1	Asm, Wire
14	56321737	3	Nut, Wire
15	56900643	1	Asm, Wire
16	56026412	1	Switch, Push
17	56900646	1	Asm, Wire
18	56387316	1	Circuit Breaker

Item	Ref. No.	Qty	Description
F1	56387316	1	Circuit Breaker, 10 Amp
J1	56637610	1	Cord Set, 120V
M1	56325096	1	Vacuum Motor
*	56203518	2	Carbon Brush Set for 56325096
M2	56325096	1	Vacuum Motor
*	56203518	2	Carbon Brush Set for 56325096
M3	56330013	1	Brush Motor, 1/3hp
*	56755056	1	Replacement Capacitor for 56330013
S1	56026973	1	Main Switch
S2	56026412	1	Brush Switch

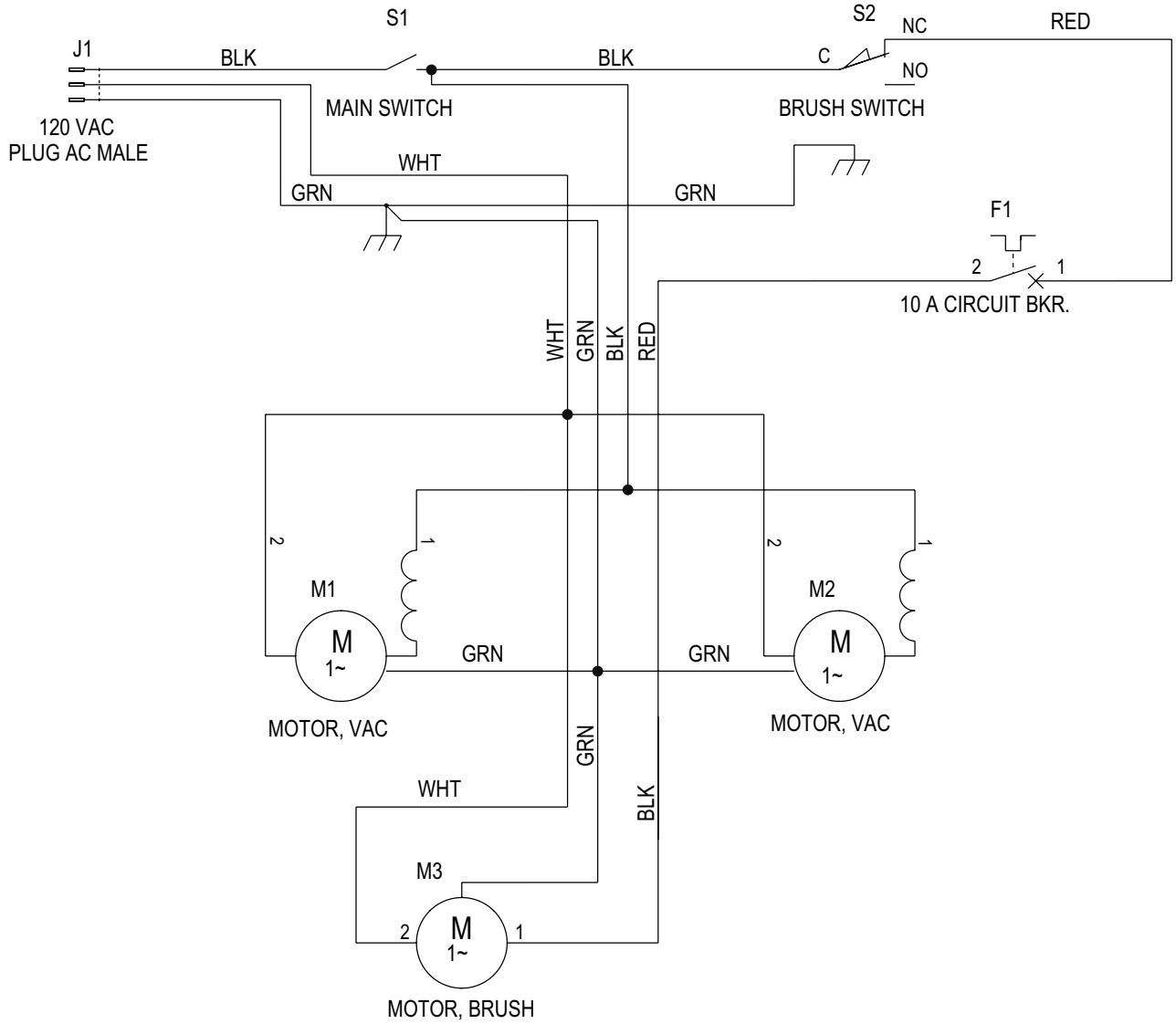

FORM NO. 56042434

KENT
Simple. Clean.
14600 21st Avenue North
Plymouth, MN, 55447-3408
www.kenteuroclean.com
Phone: 800-334-1083
Fax: 866-261-4779
©2006 Kent