SelectSpot™

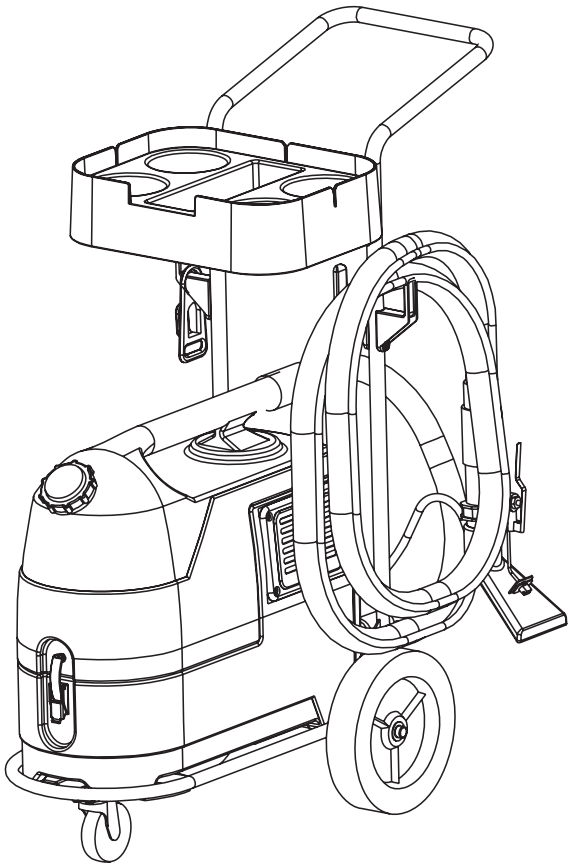

PARTS LIST

Kent / Euroclean MODEL 56220100

KENT Euroclean

Working For A Cleaner World

10/98 revised 2/03 FORM NO. 56042356

DESCRIPTION	PAGE
SELECTSPOT™	4-5
CART ASSEMBLY (OPTIONAL)	6-7
WIRING DIAGRAM	7

WHEN ORDERING PARTS

* Use the 8 digit numbers from the “Ref. No.” columns in this parts list.
* Specify the model and serial number of the machine.
* Use the space below to record the model and serial number for future reference.

Model _____ Serial No. _____

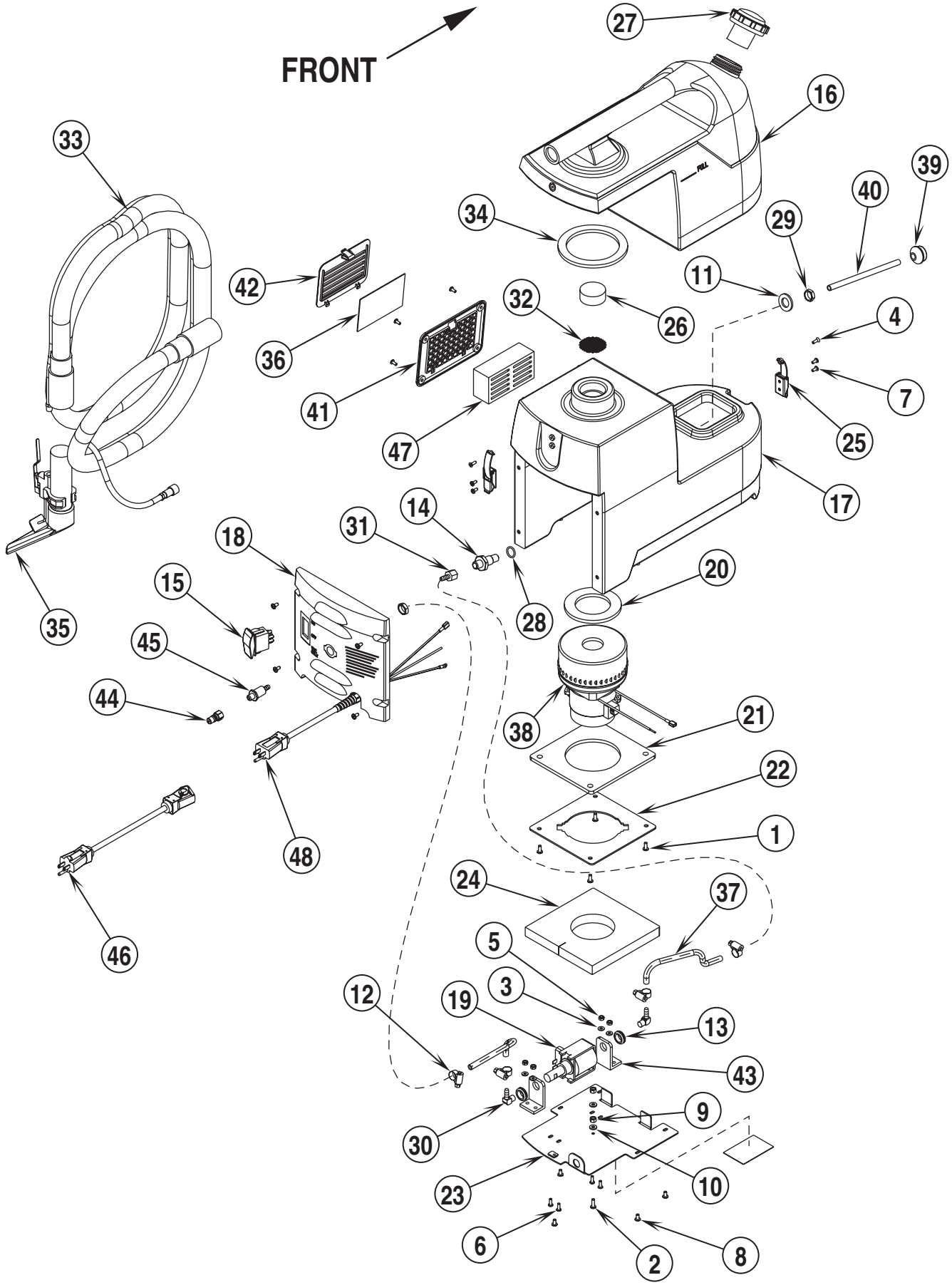
FRONT
FILL
27
16
33
39
40
34
29
42
11
32
26
4
36
41
7
47
25
17
14
31
18
20
15
28
35
45
44
38
21
22
1
48
24
37
46
5
3
12
19
13
43
9
30
10
23
6
2
8

Item	Ref. No.	Qty	Description
	56220100	1	SelectSpot™
1	56001993	4	Scr, Pan Phil 10-24 x .50
2	56002124	1	Scr, Pan Phil 10-24 x .62
3	56002140	4	Wsh, Flt SAE #8
4	56002396	2	Scr, Flt Phil 8-32 x .50
5	56002865	4	Nut, Hex Nyl Loc-Thin 8-32
6	56002876	4	Scr, Pan Phil SS 8-32 x .50
7	56003018	8	Scr, Pan Phil SS 8-32 x .38
8	56003189	9	Scr, Pan Phil SS 10-24 x .38
9	56009009	2	Nut, Hex Machine 10-24
10	56009011	2	Wsh, Int Shprf #10
11	56009218	1	Wsh, Flt .688 x 1.250 x .125
12	56756364	4	Clamp, Hose SAE #4
13	56157376	2	Grommet
14	56172075	1	Nipple 1/4NPT x 5/8-18
15	56220001	1	Switch, Rocker
16	56220002	1	Tank, Recovery
17	56220101	1	Tank, Solution
18	56220004	1	Panel, Front Molded
19	56220006	1	Pump
20	56220007	1	Gasket, Vac Seal Upper
21	56220008	1	Gasket, Vac Seal Lower
22	56220009	1	Vac Mount Plate
23	56220016	1	Panel, Bottom
24	56220021	1	Foam Air Difusser
25	56220023	2	Latch
*	56220024	1	Wire Assy (Blk 11")
26	56220025	1	Foam, Vac Intake
*	56220026	1	Wire Assy (Wht 6")
*	56220027	1	Wire Assy (Grn/Yel 14")
*	56220028	1	Wire Assy (Blk 4")
*	56220029	1	Wire Assy (Blk 4" & Blk 5")
27	56220066	1	Cap
28	56742552	1	O-Ring -114 NBR 70
29	56745860	2	Nut, Jam, 5/8-18 Brass
30	56755726	2	Barb, Hose Male
31	56756360	1	Barb, Hose Female
32	56220034	1	Screen, Vac Intake
33	56220035	1	Hose Assy **TSBUS2003-839 / NOTE 1**
*	56220046	1	Solution Hose Assy
*	56220047	1	Vacuum Hose Assy
*	56478246	6	Tie, Cable
34	56220036	1	Gasket, Tank Seal
35	56220037	1	Hand Tool **TSBUS2003-839**
	56220109	1	Upholstery Tool Assembly **TSBUS2003-839**
36	56220041	A/R	Electrostat Exht. Filter (Pkg 10)
37	56220043	2	Solution Feed Hose
38	56220045	1	Vac Motor Assy
**	56220065	1	Carbon Brush Set
39	56220048	1	Strainer
40	56220049	1	Tube
41	56220050	1	Bezel, Filter
42	56220052	1	Grill, Filter
43	56220053	1	Bracket, Kit
44	56220055	1	Plug
45	56220058	1	FTG 1/8NPT x 1/4 Barb
46	56220061	1	Cord Set, 16/3 x 25' Yel
47	56220062	1	Foam, Vac Exhaust
48	56220063	1	Cord, Pigtail Assy
*	56163228	1	Bell Nut

**	56220070	1	Upholstery Tool (**requires 56220075 before SN1650915**)
**	56262207	1	Stand-Up Wand Kit (**requires 56220075 before SN1650915**)
**	56220075	1	Quick Disconnect Adapter Kit (**only required for machines built prior to SN1650915**)

* = Not Shown
** = Optional Accessory

NOTE: When using the new style Hose Assembly **PN56220035** with the old style Hand Tool **PN56220037**, you will need to remove one of the quick disconnect fittings from the solution hose.

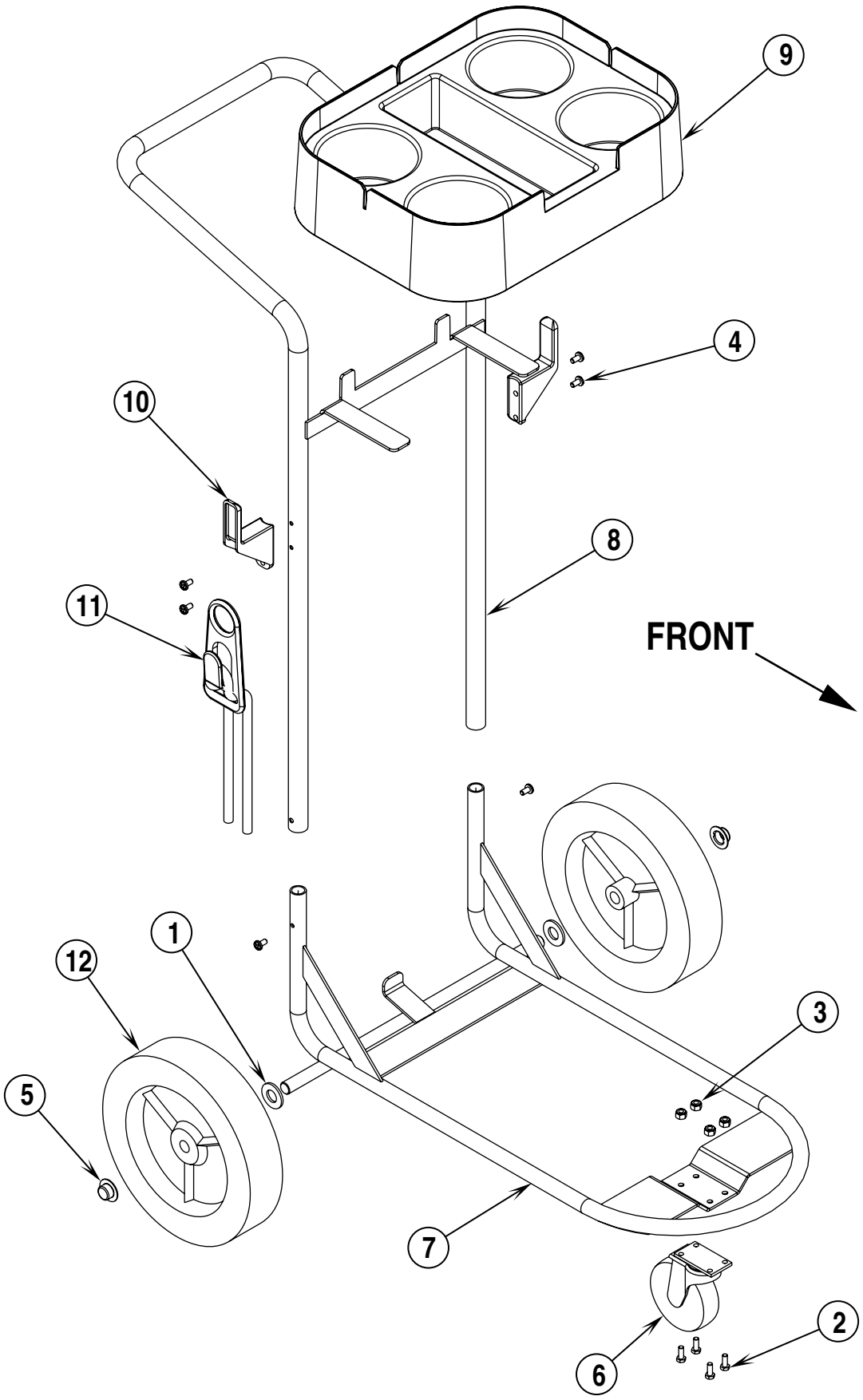
9
4
10
8
11
FRONT
1
12
3
5
7
2
6

Item	Ref. No.	Qty	Description
	56220018	1	Cart Assembly
1	56001879	2	Wsh, Flt SAE 1/2
2	56002503	4	Scr, Hex Hd 10-24 x .50
3	56002768	4	Nut, Hex Nyl Loc 10-24
4	56009030	6	Scr, Pan Phil Thd Form 10-24 x .38
5	56009097	2	Nut, Push Cap 1/2
6	56201693	1	Caster Swiv 3.0 x .81
7	56220017	1	Chassis Weld't
8	56220020	1	Handle Weld't
9	56220022	1	Molded Tray
10	56262518	2	Hook, Cord
11	56262535	1	Strain Relief
12	56346594	2	Wheel, 8 Inch

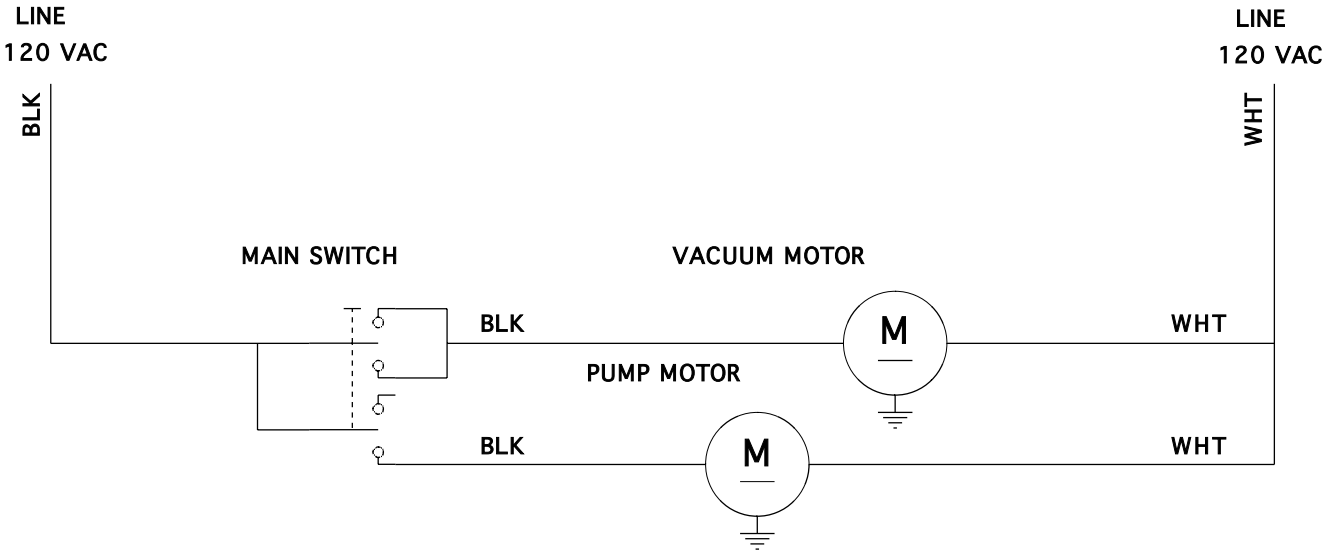

Item	Ref. No.	Qty	Description
	56220001	1	Main Switch
	56220045	1	Vacuum Motor
**	56220065	1	Carbon Brush Set
	56220006	1	Pump Motor

** = Optional Accessory

Kent/Euroclean
14600 21st Avenue North
Plymouth, MN, 55447-3408
www.eurocleanusa.com
Phone: 800-334-1083
Fax: 866-261-4779

© 2003 Printed in USA